Top Entry PCB Jack
(SMT Type, With Solder Pad)

KINSUN

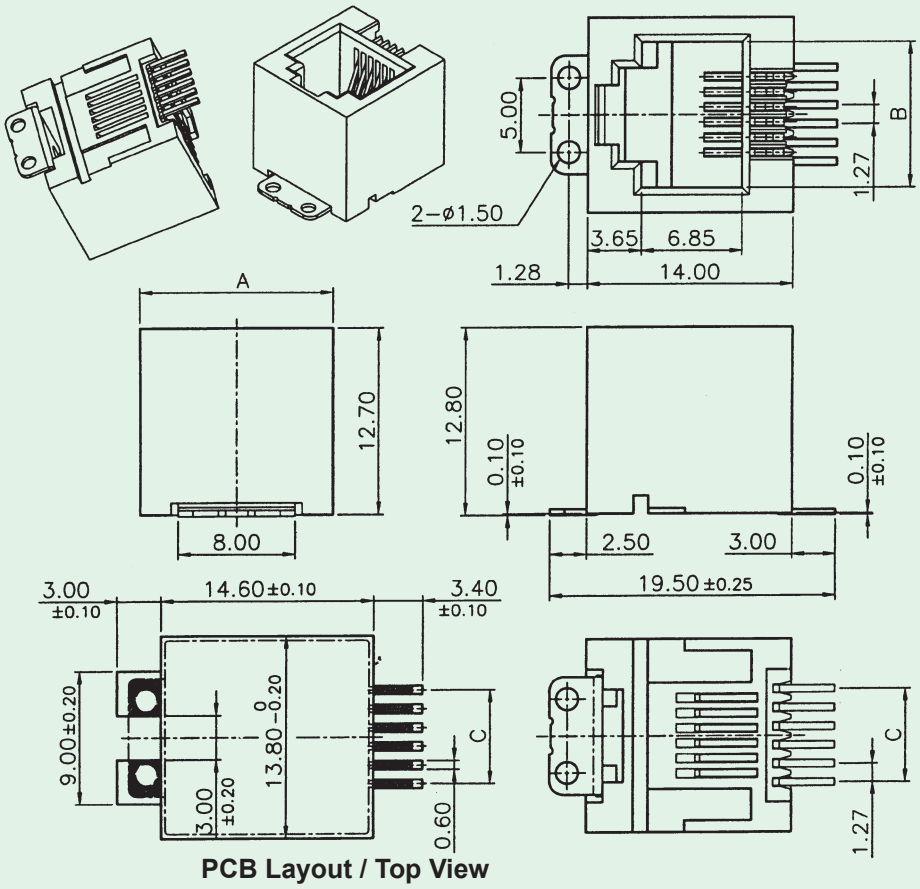

PCB Layout / Top View

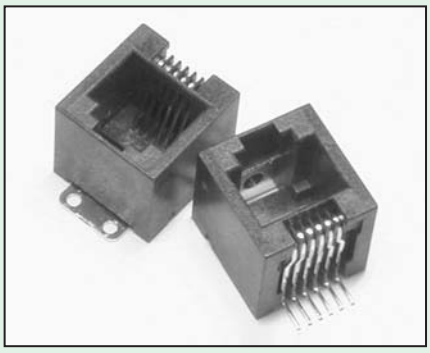

No.of Positions	Dimensions		
	A	B	C
4	13.21	7.82	3.81
6	13.21	9.85	6.35
8/10	15.50	11.90	8.89/11.43

Materials

- **Housing** : High Temp. Thermoplastic.
  Flammability Rating UL 94V-0.
- **Contacts** : Phosphor Bronze.
- **Plating** : Gold Plating Over Nickel In Contact Area.
  Tin Plating Over Nickel In Solder Area.

Ordering Information

3038 - □ □ □

Series No.

No. Of Positions
4, 6, 8 or 10

No. Of Contacts
4, 6, 8 or 10

Gold Plating Options
0 = Gold Flash
1 = 6μ"
2 = 15μ"
3 = 3 0μ"
4 = 50μ"