Modular + Power Jack

KINSUN

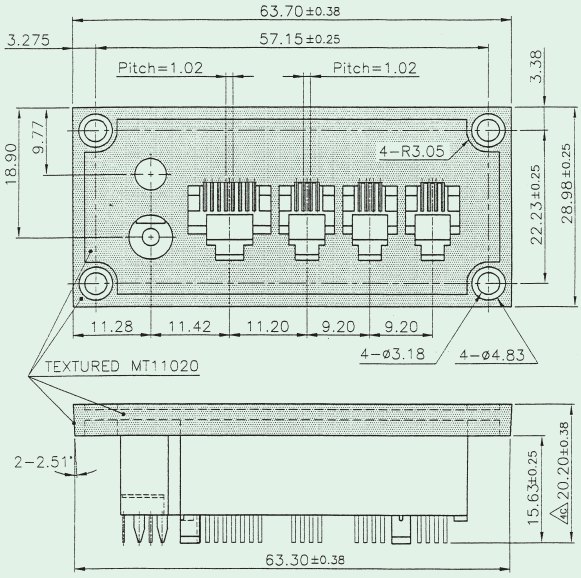

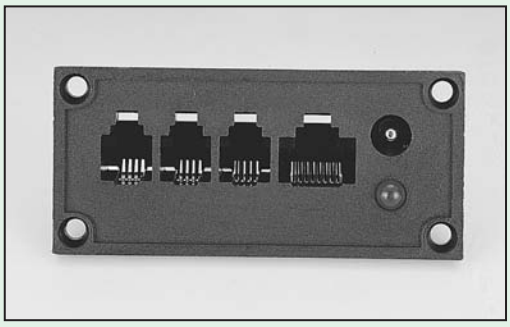

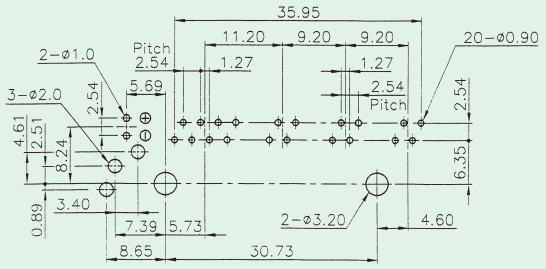

PCB Layout / Top View

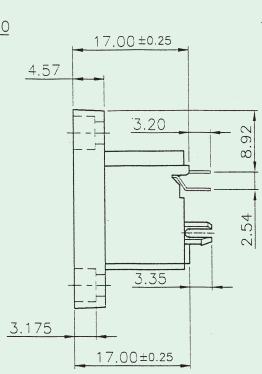

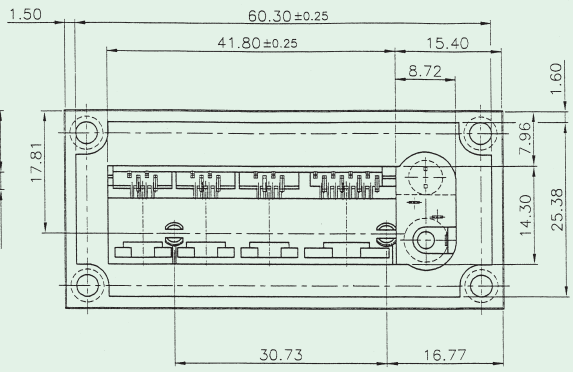

Materials

- **Housing** : Engineering Thermoplastic.
  Flammability Rating UL 94V-0.
- **Contacts** : Phosphor Bronze.
- **Plating** : Gold Plating Over Nickel In Contact Area.
  Tin Plating Over Nickel In Solder Area.

Ordering Information

3040 Series