ELECTRICAL CHARACTERISTICS @ 25°C

TURNS RATIO	
TX	ICT: 1
RX	ICT: 1
OCL: @100KHz/100mVRMS	
8mA DC BLAS	350uH MIN
INS. LOSS	
1MHz TO 100MHz	−1.0dB MAX
RET.LOSS(MIN)	
1MHz−30MHz	−18dB
30MHz−60MHz	−18+200LOG(F/30MHz)dB
60MHz−80MHz	−12dB
CROSS TALK (TX − RX)	
50KHz−100MHz	−35dB MIN
CM TO CM REJ	
100KHz−100MHz	−30dB MIN
CM TO DM REJ	
100KHz−100MHz	−40dB MIN

HIPOT (Isolation voltage): 1500Vrms

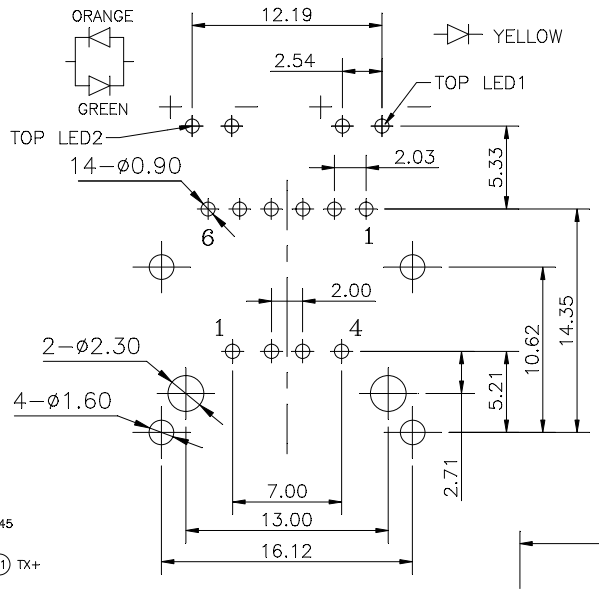

PCB LAYOUT/TOP VIEW

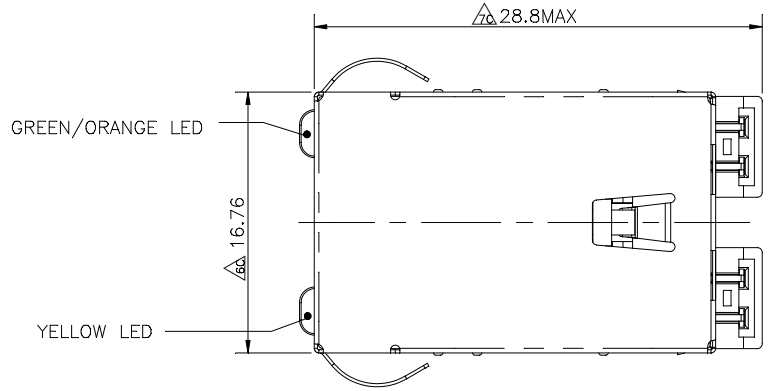

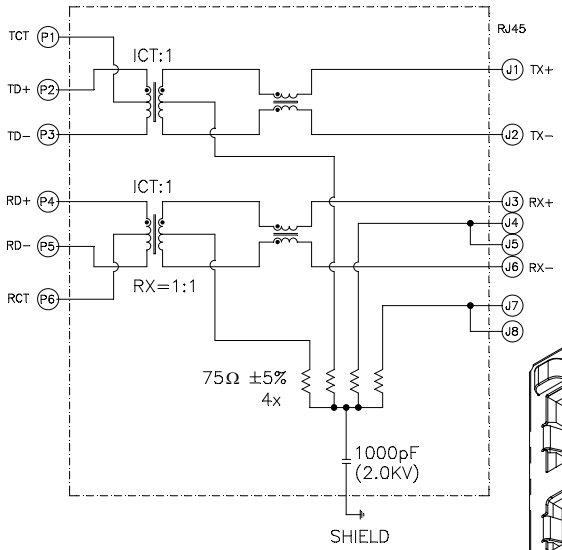

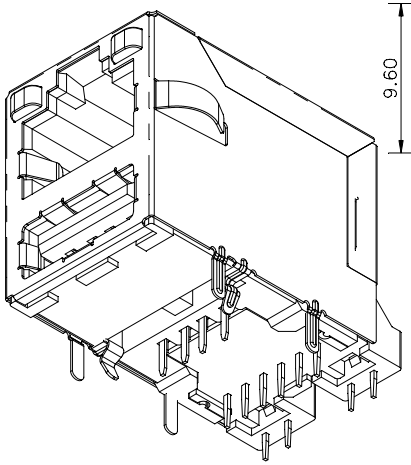

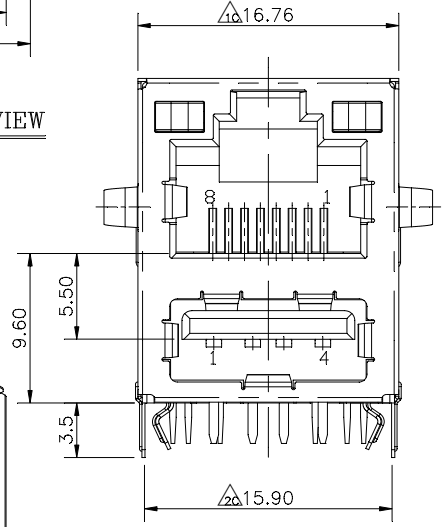

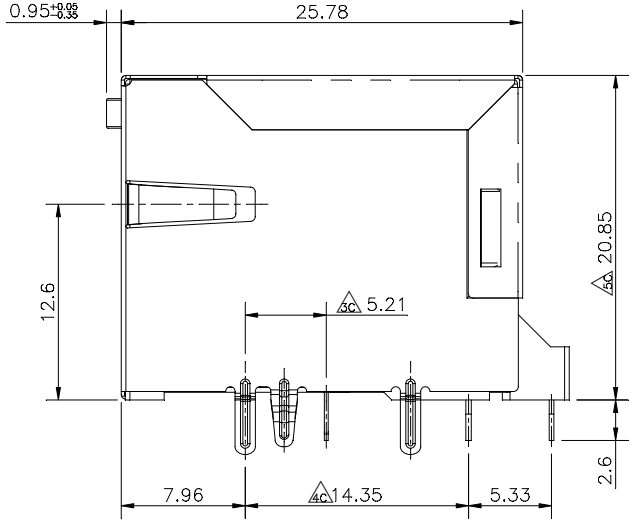

MATERIALS:
HOUSING:Thermoplastic,UL 94V−0. Color Black.
CONTACTS: Phosphor Bronze.
PLATING:
(1)Gold Plating Over Nickel In Contact.
(2)Tin Plating Over Nikel In Solder Area.
SHIELD: Brass Plating Nikel.
MECHANICAL:
DURABILITY: 1500 Mating Cycles.
P/N:
3500A11011(Contact Plating:3u"(USB)&6u"(RJ45)min.)

RoHS COMPLIANT

※凡標註△C記號者，為品管檢驗之尺寸

設計 DR. Wing 22-Jun-2010	核准 APPD. Jerry 2010-06-22	容許公差 TOLERANCE	品名 ARTICLE MADULE JACK_RJ45 OVER SINGLE USB
版本說明 REVISION NOTE		.XXX ±0.10	圖號 DWG NO. 3500A11011
−−−−−−−修改SPEC敘述−−−−−−−		.XX ±0.25	
		.X ±0.38	
		X ±0.50	
		ANG ±3°	
KINSUN			單位 UNIT mm / 比例 SCALE 1/3 / 張數 SHEET 1/1 / 版本 REV. D