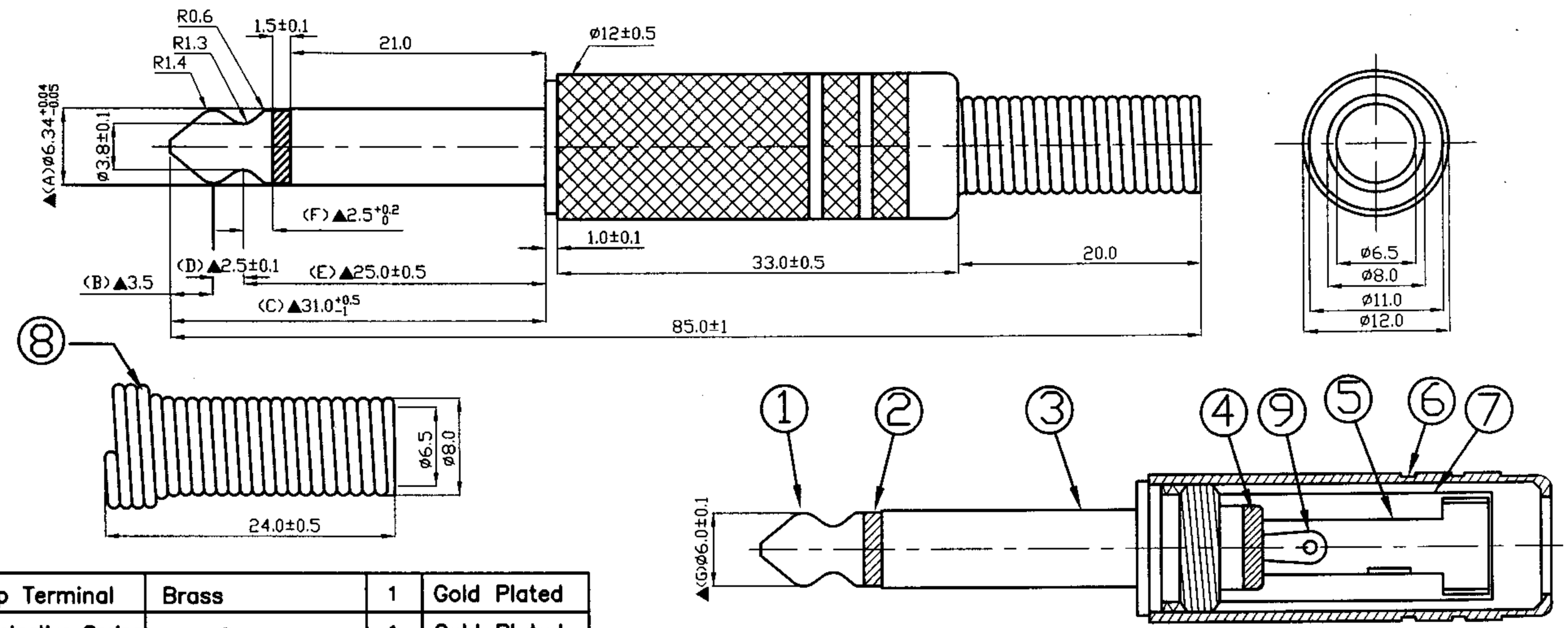

NO.	Description	Material	Q'TY	Finish
9.	Tip Terminal	Brass	1	Gold Plated
8.	Protective Spring	Iron Spring	1	Gold Plated
7.	Bushing	PVC	1	Transparency
6.	Metal Housing	Brass	1	Gold Plated
5.	Earth Terminal	Brass	1	Gold Plated
4.	Terminal Insulator	ABS	1	Gold Plated
3.	Sleeve	Brass	1	Gold Plated
2.	Insulator	ABS	1	Black Color
1.	Contact Head	Brass	1	Gold Plated

S.C. PRECISION INDUSTRIAL CO., LTD.

DATE	DWN	CHKD	APVD	MANAGER
06.06.2006	鄧華香			

PART NAME : 6.3ø PHONE PLUG | PART NUMBER: SCPG601MM0G0000G | VERSION:1.0

TOLERANCE :±0.2mm UNLESS OTHERWISE SPECIFIED | UNIT:mm | SCALE:1/1

旭全 精密工業(深圳)有限公司 2006 6. 09. 圖面發行

文管 中心发行 2006 6. 09.

SPECIFICATIONS:
Contact Resistance : 30mΩ max
Insulation Resistance : 100MΩ min. at DC 500V
Dielectric Withstanding Voltage: AC 500V for one minute
Remark: ▲: The Most Important Dimension